FRONTIER
DISTRIBUTION PRODUCTS

151 INDUSTRIAL PARK RD., COLBORNE, ONTARIO
WWW.FRONTIERDISTRIBUTIONPRODUCTS.COM

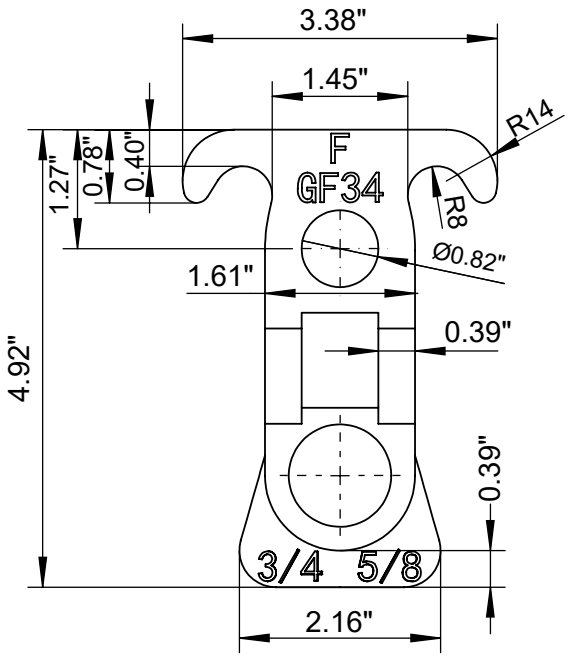

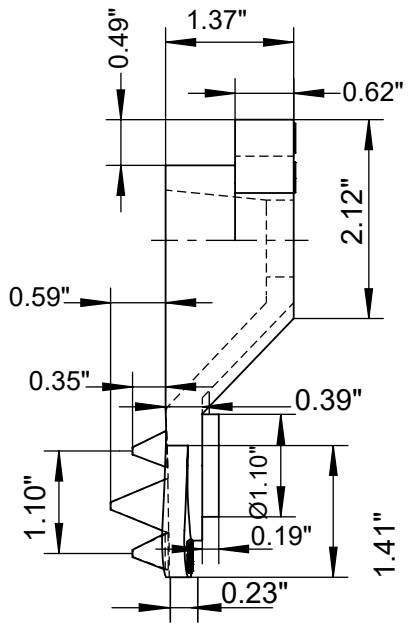

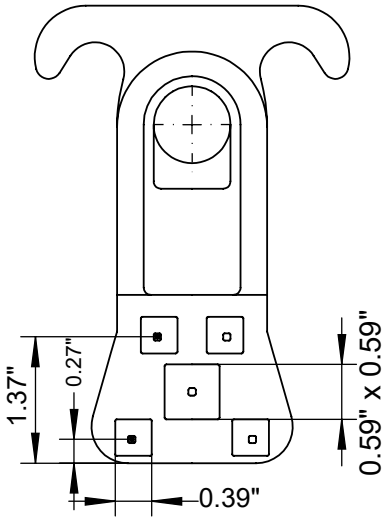

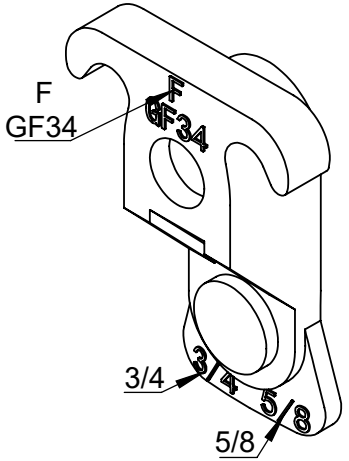

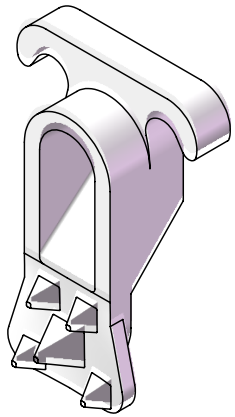

NOTES:
MATERIAL: MALLEABLE IRON OR DUCTILE IRON
FINISH: HOT DIPPED GALVANIZED PER CSA G164
LOAD STRENGTH: 20,000LBS
MEETS CSA C83 STRENGTH REQUIREMENTS

Guy Hook

Catalog Number: 400GF34