FRONTIER
DISTRIBUTION PRODUCTS

151 Industrial Park Rd
Colborne, ON K0K 1S0
905-355-3281

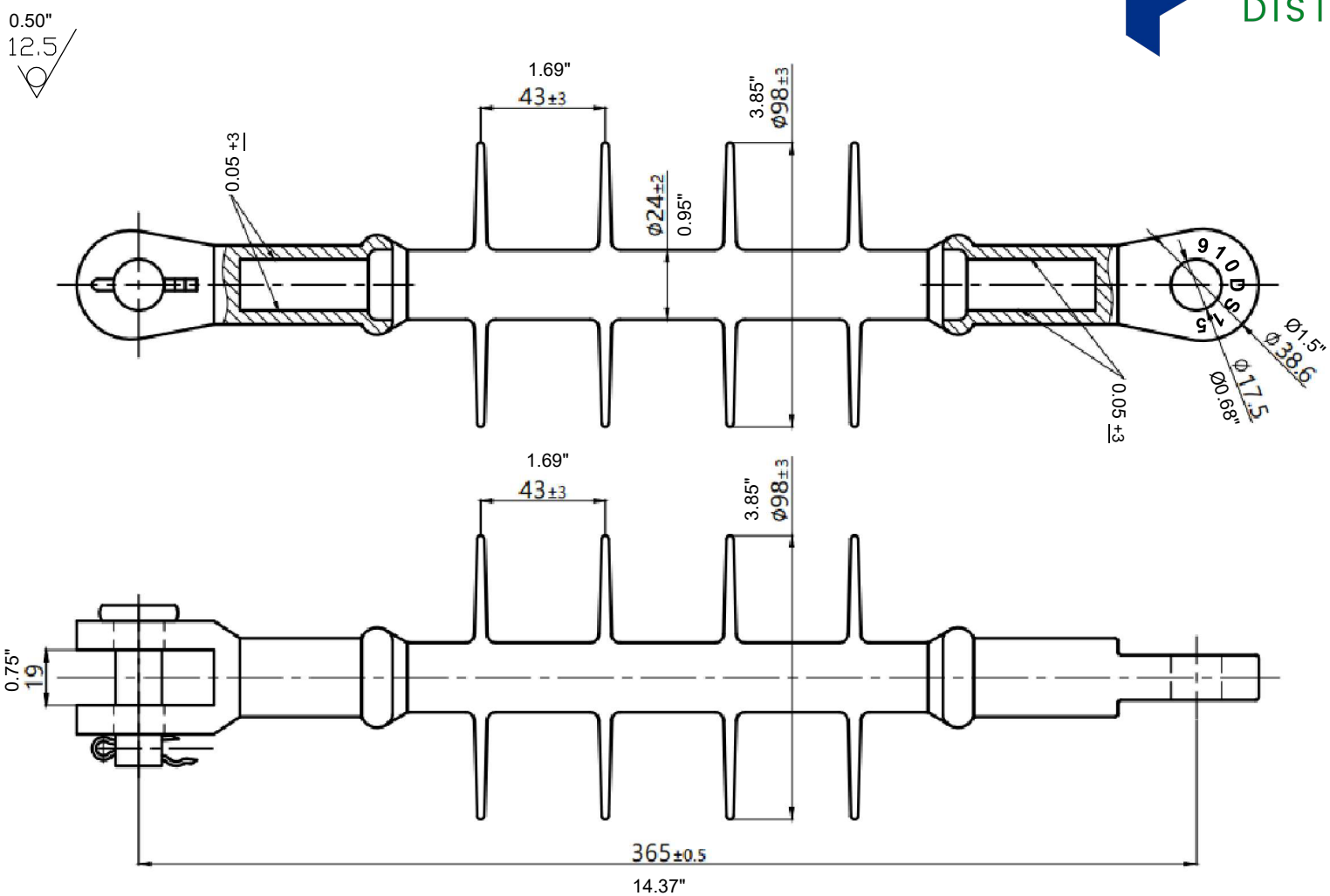

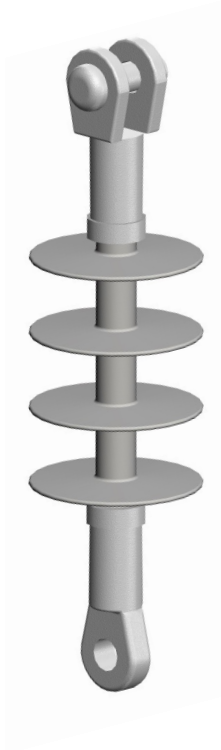

NOTES:

MIN. DRY ARCING DISTANCE: 195MM [7.68"]
MIN. LEAKAGE DISTANCE: 470MM [18.50"]
DIAMETER OF THE CORE ROD: Ø18MM
CRITICAL IMPULSE FLASHOVER VOLTAGE (POS/NEG): 140/145KV
POWER FREQUENCY FLASHOVER VOLTAGE (DRY/WET): 70/60KV
MATERIAL: EPOXY; SILICONE, END FITTING: HOT DIPPED GALVANIZED STEEL
COLOUR: GREY

Manufacturing Standard: ANSI/IEEE 2024

Suspension Dead-End Insulator, 15kV, 70kN, Clevis to Tongue	
Frontier Part Number:	**910DS15**